CHAPTER SIX

Radio Receiver Construction

The receivers described in this chapter can, for the most part, be constructed with a few inexpensive hand tools. Whether one saves anything over purchasing a factory built receiver depends upon several factors (see *chapter 19*). In any event, there is the satisfaction of constructing one's own equipment, and the practical experience that can be gained only by actually building apparatus.

After finishing the wiring job it is suggested that one go over the wiring very carefully to check for errors before applying plate voltage to the receiver. If possible, have someone else check the wiring after you have gone over it yourself. Some tubes can be damaged permanently by having screen voltage applied when there is no voltage on the plate. Electrolytic condensers can be damaged permanently by hooking them up backwards (wrong polarity). Transformer, choke, and coil windings can be burned out by incorrect wiring of the high voltage leads. Most any tube can be damaged by hooking up the elements incorrectly; no tube can last long with plate voltage applied to the control grid.

Before starting construction it is suggested that one read the chapter on *Workshop Practice.*

SIMPLE TWO-TUBE AUTODYNE

A simple yet versatile receiver of modest cost is illustrated in figures 1, 2, and 3. The receiver uses an autodyne detector and one stage of impedance coupled a.f. to give good earphone volume on all signals. The circuit is quite simple, as inspection of figure 4 will disclose.

The receiver uses 6.3-volt tubes, which may be supplied heater power from either a small 6.3-volt filament transformer or a regular 6-volt auto battery. For regular home use a transformer is recommended, but the provision for use with a battery permits

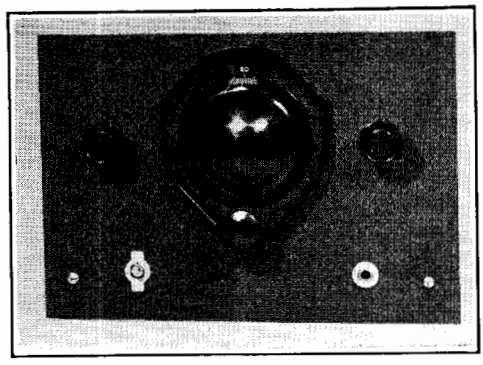

Figure 1.
SIMPLE TWO-TUBE AUTODYNE RECEIVER.
This receiver is inexpensive to build and has excellent weak signal response. While not as selective as more elaborate receivers, it makes a good set for the newcomer's first receiver.

semi-portable operation. This makes the receiver a good one for a beginner, as it can be used as a portable or emergency receiver later on should one decide to build or buy a more elaborate receiver.

Plate voltage is supplied from a standard, medium-duty 45-volt B battery. Such a battery, costing only a little over a dollar, will last over a year with normal use, as the B current drain of the receiver is only a few milliamperes. This voltage is sufficient for good performance of the receiver, because the full plate voltage is supplied to the detector as a result of the use of a choke (CH_1) instead of the usual plate resistor in the plate circuit of the detector. Also, the *amplification* of the 6C5 is practically as great at 45 volts as at the full maximum rated voltage of 250 volts. The maximum undistorted power output of the a.f. stage is considerably less at 45 volts, but as it is more than sufficient to drive a pair of phones, there is no point in using higher plate voltage. For these reasons a single B battery was de-

cided upon in preference to an a.c. power pack, because the battery is not only much less expensive but permits portable operation.

When wired as shown in the diagram, the receiver should not be used with higher plate voltage, because the screen potentiometer is across the full plate voltage, and also because the 1¼-volt bias on the 6C5 is not sufficient for higher plate voltage.

The receiver can be built for about $12, including B battery and midget filament transformer, provided inexpensive components are chosen.

While the receiver will operate on 10 meters and a 10 meter coil is included in the coil table, the receiver is designed primarily for 20-, 40-, and 80-meter operation. No matter how well constructed, an autodyne receiver is not particularly effective on 10 meters, especially on phone. No provision was made for 160-meter operation, as the receiver does not have sufficient selectivity to distinguish between several very loud phone signals in the same part of the band.

For 20-, 40-, and 80-meter operation the receiver compares favorably with the most expensive when it comes to picking up weak, distant stations, especially on c.w. However, loud local signals have a tendency to block it, and therefore more trouble will be experienced with QRM than with a superheterodyne.

The chassis consists of a 6x9 inch Masonite "presdwood" top and 1¾-inch back of the same material. These are fastened to two pieces of wood which form the sides of the chassis. The wooden sides are 1¾ inch high, ¾ inch thick, and are 6 inches long, *including* the Masonite back. The whole thing is held together with wood screws as may be seen in figures 2 and 4, and a 7-inch by 11-inch metal front panel is attached to the chassis by means of wood screws sunk in the wooden end pieces of the chassis.

Inexpensive wafer sockets are used. Because the thickness of the chassis would make it necessary to drill holes large enough to take the whole tube base if the sockets were mounted below the chassis as is customary

COIL TABLE
For Two-Tube Autodyne

All coils wound with no. 22. d.c.c. on standard 1½-inch forms

80 M.
29 turns close wound; cathode tap 1½ turns from ground

40 M.
16 turns spaced 1¾ inches; cathode tap 1½ turns from ground

20 M.
7 turns spaced 1¼ inches; cathode tap 1½ turns from ground

10 M.
4 turns spaced 1¼ inches; cathode tap 1 turn from ground

Figure 2.
BACK VIEW OF THE TWO-TUBE AUTODYNE.
The chassis is made of wood and Masonite wall board. The "shield hat" for the grid leak and condenser hide most of the main tuning condenser.

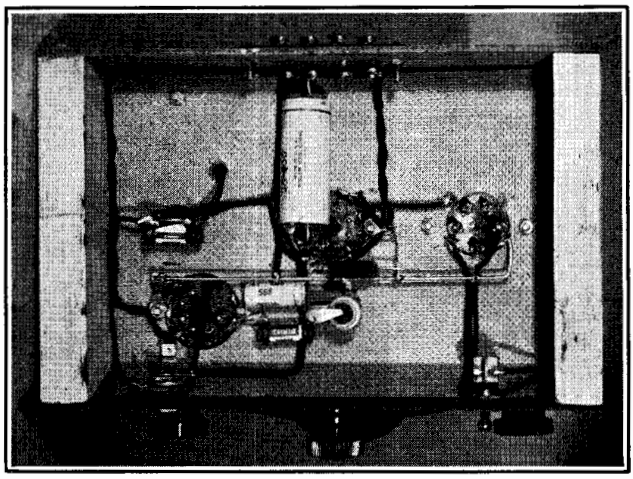

Figure 3.
UNDER-CHASSIS VIEW OF TWO-TUBE AUTODYNE.
The construction of the chassis and placement of components is clearly illustrated. If desired the phone jack may be mounted on the back of the chassis.

with metal chassis, the sockets are mounted on *top* of the chassis. This is clearly illustrated in the photographs.

Correct connection of the socket terminals can be assured by referring to the socket connections for the 6J7 and 6C5 in *Chapter 5*. Bear in mind that these are bottom views of the sockets, with the socket facing you the same as when soldering to the terminals from the underside of the chassis.

Connections for filament and plate power are made by means of a terminal strip which is mounted over a hole cut in the back of the chassis. If you do not have the proper tools for cutting out a long, rectangular hole, four separate holes about 3/8 inch in diameter will take the terminal screws and lugs. If desired, the terminal strip can be replaced by four Fahnestock clips screwed directly to the back of the chassis.

The phone jack is shown mounted on the front panel, along with a toggle switch in the B plus lead. If mounted on the metal front panel, the phone jack must be insulated from the panel by means of fiber washers to prevent shorting the plate voltage. The jack

Figure 4.
WIRING DIAGRAM OF TWO-TUBE AUTODYNE.
By substituting a 6S7 for the 6J7 and a 6L5-G for the 6C5, the receiver can be run economically from dry cells for heater power. Only 4½ volts is required, and three no. 6 dry cells will give over 150 hours life.

C_1—15-$\mu\mu$fd. midget variable
C_2—100-$\mu\mu$fd. midget variable
C_3—100-$\mu\mu$fd. smallest size mica condenser
C_4—0.25-μfd. tubular, 400 v.
C_5—.0005-μfd. midget mica
C_6—.01-μfd. tubular, 400 v.
R_1—3 meg., ½ watt
R_2—50,000 ohm pot.
R_3—0.25 meg., ½ watt
R_4—0.5 meg., ½ watt
BC—1¼-volt bias cell
CH—300 or more hy., 5 ma.
L_1—See coil table

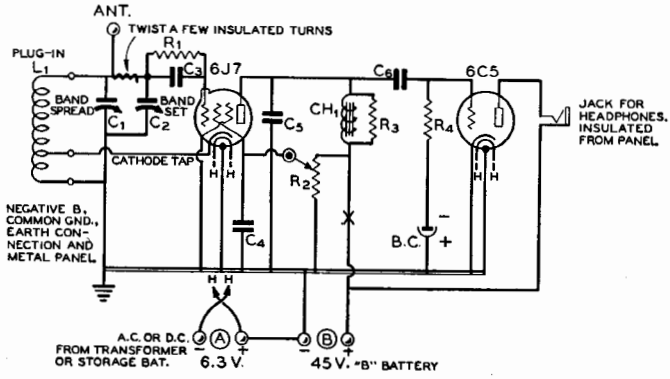

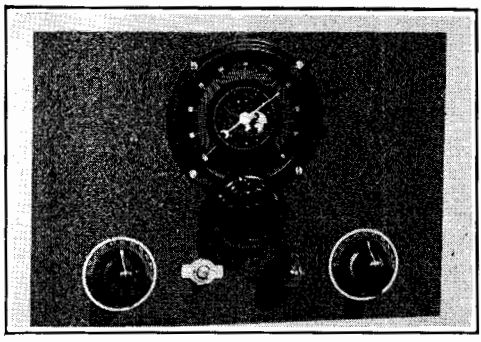

Figure 5.
SIMPLE THREE-TUBE SUPERHETERODYNE.
The bandset condenser is to the left, the detector "resonating" condenser to the right. The latter makes an effective volume control. The small knob operates the regeneration potentiometer.

could just as well be mounted on the back of the chassis, in which case it would not require insulating washers.

The screen potentiometer is across the B battery and draws a small amount of current even with the filaments turned off; hence it is necessary either to unhook the B battery when the set is not in use or else incorporate a switch to accomplish the same thing. If desired a potentiometer with an "off switch" can be used, in which case the B battery is disconnected simply by turning the potentiometer knob all the way to the left. The heaters are turned off by turning off the 110-volt supply to the filament transformer.

As is true with any grid leak type detector, the grid lead (including the grid leak and condenser) must be shielded thoroughly in order to avoid bad hum pickup, commonly known as "grid hum." This is accomplished effectively by soldering the grid leak and grid condenser (both of the smallest physical size procurable) directly to the grid clip and shielding the whole business by means of a "hat" consisting of a regular metal tube grid shield cap to which is soldered a rectangular piece of tin or galvanized iron as shown in the illustration. The latter measures about 1½ by 3 inches and is bent in the form of a "U," then soldered to the grid clip shield. Care must be taken that the shield does not short out against any of the connecting leads.

The antenna may consist of a 50 to 100 foot length of wire as high and in clear as possible. It is capacity coupled to the receiver by means of a few turns of insulated wire around the grid lead. A small 3-30 $\mu\mu$fd. compression type mica trimmer may be substituted as a variable coupling condenser if desired.

After the correct position of the bandset condenser (C_2) is determined for a given band, a scratch or mark is made on the back rotor plate to enable one to adjust the bandset condenser for any band simply by observing the marks on the bandset condenser.

The wiring diagram assumes that the receiver will be used with magnetic type earphones. If crystal earphones are used, a small 30-hy. choke should be connected across the headphone jack.

SIMPLE THREE-TUBE SUPERHETERODYNE

The small superheterodyne shown in the accompanying illustrations has practically all of the advantages of sets having many more tubes. It has good image rejection, selectivity and sensitivity, and drives either phones or a dynamic loudspeaker to good volume.

A 6K8 converter directly feeds a regenerative second detector operating just above 1500 kc. The latter is impedance coupled to a beam tetrode audio tube. The plate current and audio power output are too great for a pair of phones; so the phones are connected in the screen circuit.

Excellent selectivity and sensitivity are obtained on phone by running up the regeneration on the second detector right to the edge of oscillation. By advancing the regeneration control still farther the second detector will oscillate, thus providing autodyne reception of code signals. The regeneration also acts as a sensitivity control to prevent blocking by very loud local signals. To keep loud phone signals from blocking, the regeneration is decreased way below the edge of oscillation. To keep loud c.w. signals from blocking, the regeneration control is advanced full on.

The 6K8 converter is conventional and no special precautions need be taken with this stage except to keep the first detector leads as short as possible in order to obtain maximum performance on 10 meters. A minimum number of coils is required for all-band operation (10 to 160 meters) because the oscillator coil for each band serves as the detector coil for the next higher frequency band, the tickler serving as the antenna winding. Thus all coils except the 160-meter detector and 10-meter oscillator coils do double duty.

The set is built on a metal chassis meas-

uring 2½ inches by 6 inches by 8 inches. This supports a 7-inch by 10-inch front panel. The correct placement of components may be determined by referring to the illustrations.

To obtain regeneration in the grid leak type second detector, a tickler coil is added to the i.f. transformer. Inspection of figure 7 will show that the second detector then resembles the common "autodyne" grid leak detector with regeneration control.

For maximum performance, the detector should go into oscillation when the screen voltage is about 35 volts. This is accomplished by using as a tickler 3 turns of no. 22 d.c.c. wound around the dowel of the i.f. transformer, right against the grid winding. Few tickler turns are required, as there is no antenna to load the detector, and therefore it goes into oscillation with but little feedback.

To wind the tickler, simply remove the shield from the i.f. transformer, and, using a foot length of the same d.c.c. used to wind the plug in coils, wrap three turns around the dowel as closely as possible to the grid winding. Then twist the two leads together to keep the turns in place and replace the shield. The polarity of the tickler must be correct for regeneration; if oscillation is not obtained, reverse the two tickler leads.

Care must be taken with the grid leak, grid condenser, and grid lead of the 6SJ7; otherwise there will be "grid hum." The outside foil of the tubular grid condenser should go to the i.f. grid coil and *not* to the grid of the tube. Connection to the grid pin of the 6SJ7 socket should be kept as short as possible—not over a half inch, and both grid leak and grid condenser should be kept at least a half inch from other wiring. In some cases it may be necessary to shield the grid leak and condenser with a small piece of grounded tin in order to eliminate grid hum completely.

The phone jack is a special type, commonly called a two-circuit "filament lighting" jack. It is connected so that when the phones are inserted they not only are connected in the screen circuit in such a way that no d.c. flows through the phones, but the speaker transformer is shorted out in order to silence the speaker. Switching the plate of the 6V6 directly to B plus also improves the quality in the phones slightly.

Any well-filtered power supply delivering between 300 and 375 volts at 50 ma. can be used to supply the receiver. If the speaker is of the p.m. type, requiring no field supply, a 200 to 250 volt power pack will suffice.

Either a two-wire feeder or single-wire antenna worked against ground can be used. For doublet input, connect to the two antenna coil terminals. For Marconi input, ground one terminal and connect the antenna to the other.

Figure 6.
REAR VIEW OF THE SIMPLE SUPER.
The detector coil is to the left, directly above the detector tuning condenser, and the oscillator coil is to the right. Antenna terminals, power socket, speaker plug socket, and earphone jack may be seen on the back drop of the chassis.

Figure 7.
WIRING DIAGRAM OF THE SIMPLE SUPER.

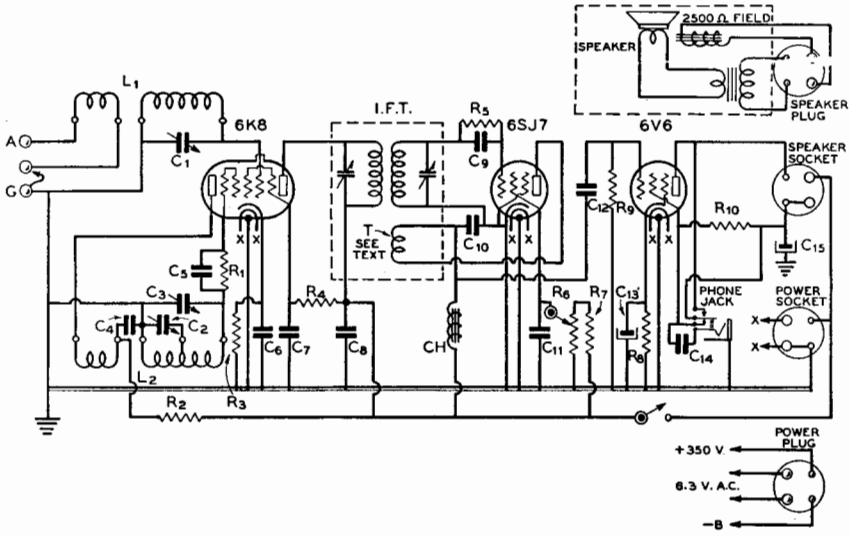

C_1, C_2—50-$\mu\mu$fd. midget variable
C_3—140-$\mu\mu$fd. midget variable
C_4, C_8, C_{11}, C_{14}—0.1-μfd. tubular, 400 v.
C_5, C_9—.0001-μfd. tubular, 600 v.
C_6, C_7, C_{12}—.01-μfd. tubular, 600 v.
C_{10}—.001-μfd. tubular, 600 v.
C_{13}—25-μfd. 25 v. electrolytic
C_{15}—4-μfd. 450 v. midget tubular electrolytic
R_1, R_2—50,000 ohms, 1½ watts
R_3—300 ohms, 1 watt
R_4—40,000 ohms, 1½ watt
R_5—5 meg. insulated ½ watt resistor
R_6—100,000 ohm potentiometer
R_7—100,000 ohms, 1½ watts
R_8—400 ohms, 10 watts
R_9—500,000 ohms, 1½ watts
R_{10}—10,000 ohms, 10 watts
IFT—1500 kc. replacement type i.f. trans. (see text for tickler data)
CH—High impedance audio choke, 500 or more hy.
Phone Jack—Two circuit "filament lighting" type

Adjusting the mica trimmer on the grid coil of the i.f.t. changes the i.f. frequency. The trimmer on the plate coil should always be resonated for maximum signal strength. It need not be touched after the initial adjustment unless the grid trimmer is changed. The i.f. frequency should be adjusted to about 1550 kc. and then a check made to make sure it is not right on some nearby police or high fidelity broadcast station.

The only band on which images might be bothersome is the 10-meter band. In most cases objectionable images can be eliminated without serious loss in signal strength by shifting the h.f. oscillator to the other side by means of the bandset condenser. The receiver will work with the oscillator either *higher or lower* by the i.f. frequency than the received signal. On the higher frequency bands the bandset condenser tunes over a wide enough band of frequencies that it hits both sides.

On certain bands the gain and sensitivity are better with the h.f. oscillator on one side of the detector than on the other. Some experimenting with the bandset condenser should be made on those bands where it is possible to hit both the high and low side with the bandset condenser.

ECONOMICAL FIVE-TUBE SUPERHETERODYNE

The sensitivity of the simple superheterodyne just described can be increased by the addition of a tuned r.f. stage ahead of the mixer. The gain and selectivity can be increased by the addition of an i.f. stage. These additions do not add greatly to the total cost and the improvement in performance makes their incorporation highly desirable. The construction, however, is somewhat more difficult, and should not be attempted as the builder's first effort.

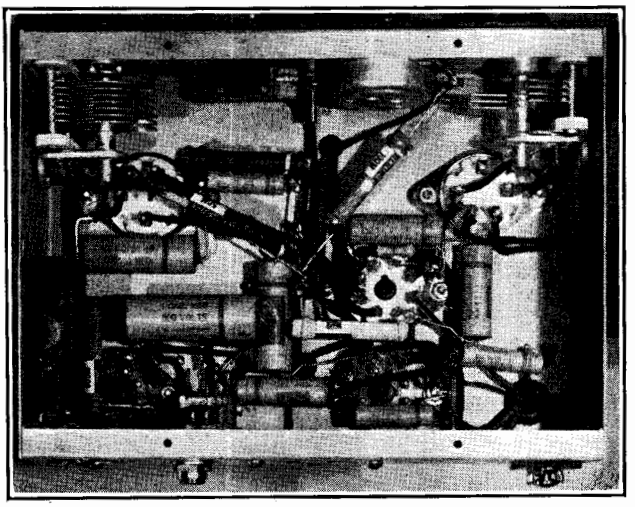

Figure 8.
UNDER-CHASSIS VIEW OF SIMPLE SUPER.
Not much room to spare, but all components fit without crowding. The phone jack is mounted directly on the rear drop of the metal chassis; because of the method of connection, no insulating washers are required.

Electrically the receiver is essentially the same as the three-tube superheterodyne except for the addition of a 6K7 radio frequency stage and a 6SK7 intermediate frequency amplifier. To minimize the number of tuning controls, the tank condenser for the r.f. stage is ganged with the tank condenser of the mixer stage.

Mechanical Layout. The r.f. stage is located on the left front corner of the 7x11x2 inch chassis. The mixer stage is placed at the rear left corner of the chassis, with the shield partition visible in figure 9 separating it from the r.f. stage. Placing the r.f. and mixer coils toward the edge of the chassis removes them from the proximity of the front-to-back shield, which otherwise might lower the gain obtained in the tuned circuits.

The under-chassis view, figure 11, shows the location of the two 50-$\mu\mu$fd. ganged condensers used to tune the r.f. and mixer stages. By reversing the usual mounting procedure on these condensers and hanging them stator side down from the chassis, the shafts are brought out at the center of the front drop. A small isolantite coupling is used to gang the two condensers.

For data on how to wind the tickler turns on the second i.f. transformer, refer to the description given for the three-tube superheterodyne previously described. The procedure is the same for either receiver. The remarks pertaining to grid hum in the second detector also apply to the five tube model.

The receiver is designed for enclosure in a metal cabinet. The cabinet completes the shielding between the r.f. and mixer stages,

COIL TABLE
For Simple Super

160-M. Det.
58 turns no. 24 enam. close wound on 1½ in. form, padded with 50 $\mu\mu$fd. midget mica fixed condenser placed inside form. Ant. coil 14 turns close wound at ground end spaced ¼ in. from grid winding.

160-M. Osc.—80-M. Det.
42 turns no. 22 d.c.c. close wound on 1½ in. form. Bandspread tap 20 turns from ground end. Tickler 9 turns close wound, spaced 1/16 in. from main winding.

80-M. Osc.—40-M. Det.
20 turns no. 22 d.c.c. spaced to 1½ in. on 1½ in. form. Bandspread tap 12 turns from ground end. Tickler 8 turns close wound, spaced ⅛ in. from main winding.

40-M. Osc.—20-M. Det.
11 turns no. 22 d.c.c. spaced to 1¼ in. on 1½ in. form. Bandspread tap 5 turns from ground end. Tickler 6 turns close wound, spaced ⅛ in. from main winding.

20-M. Osc.—10-M. Det.
5½ turns no. 22 d.c.c. spaced to 1 in. on 1¼ in. form. Bandspread tap 3 turns from ground end. Tickler 4 turns close wound, spaced 1/16 in. from main winding.

10-M. Osc.
3 turns no. 22 d.c.c. spaced to 1 in. on 1¼ in. form. Bandspread tap 1½ turns from ground end. Tickler 2 turns close wound, spaced 1/16 in. from main winding.

Tickler is always at ground end of main coil. Note that two highest frequency coils are on 1¼ in. forms, rest 1½ in. Tickler polarity must be correct or mixer will not oscillate.

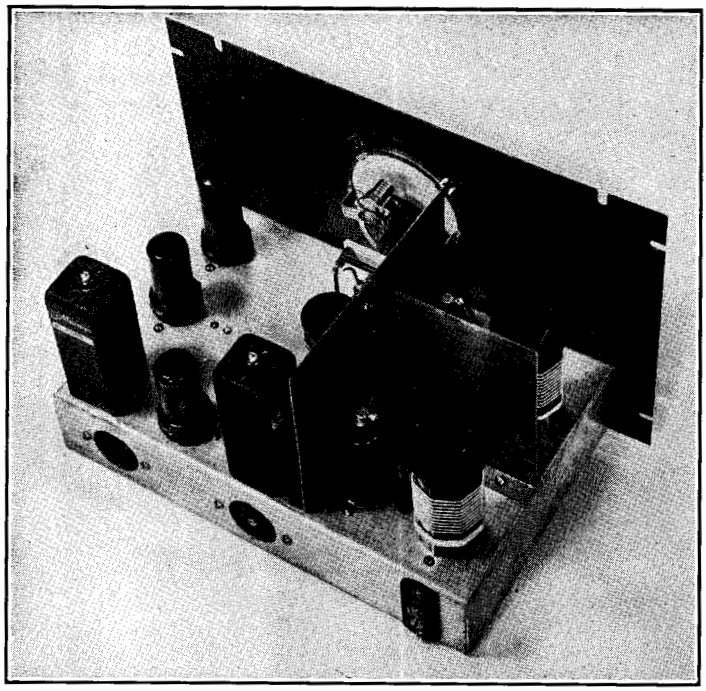

Figure 9.
TOP VIEW OF 5-TUBE SUPERHET.
R.f. stage at the front, mixer at the rear and the i.f. and audio strung out along the rear and far edge of the chassis. A corner of the oscillator coil may be seen peeking around the front-to-rear shield.

and prevents oscillation. If a metal cabinet is not used, more elaborate shielding partitions than those illustrated in figure 9 will be required.

Coils. If the data given in the coil table are followed closely no trouble should be experienced in getting the r.f. and mixer stages to track accurately. It will be noted that the r.f. and mixer coil secondaries are identical on all bands except 10 meters, where the r.f. stage has one less turn. It is a simple matter to check the tracking. All that is necessary is to loosen the set screws on the coupling between the r.f. and mixer condensers and resonate each condenser separately. By observing the amount of capacity used to resonate each stage near the center of the band in question, it may be determined whether an increase or decrease in the inductance of either coil is necessary.

COIL TABLE

Band	L_1	L_2	L_3
80	Grid—42 turns closewound Antenna—7 turns closewound Form—1½" dia.	Grid—42 turns closewound Plate—9 turns closewound Form—1½" dia.	Grid—20 turns spaced to 1½" Tickler—8 turns closewound Tap—15 t. from ground end Form—1½" dia.
40	Grid—21 turns spaced to 1½" Antenna—6 turns closewound Form—1½" dia.	Grid—21 turns spaced to 1½" Plate—7 turns closewound Form—1½" dia.	Grid—10 turns spaced to 1¼" Tickler—6 turns closewound Tap—6½ t. from ground end Form—1½" dia.
20	Grid—11 turns spaced to 1¼" Antenna—4 turns closewound Form—1½" dia.	Grid—11 turns spaced to 1¼" Plate—6 turns closewound Form—1½" dia.	Grid—6 turns spaced to 1" Tickler—4 turns closewound Tap—4 t. from ground end Form—1¼" dia.
10	Grid—6 turns spaced to 1" Antenna—4 turns closewound Form—1¼" dia.	Grid—7 turns spaced to 1" Plate—4 turns closewound Form—1¼" dia.	Grid—3 turns spaced to 1" Tickler—3 turns closewound Tap—2 t. from ground end Form—1¼" dia.

All coils are wound with no. 22 d.c.c. wire

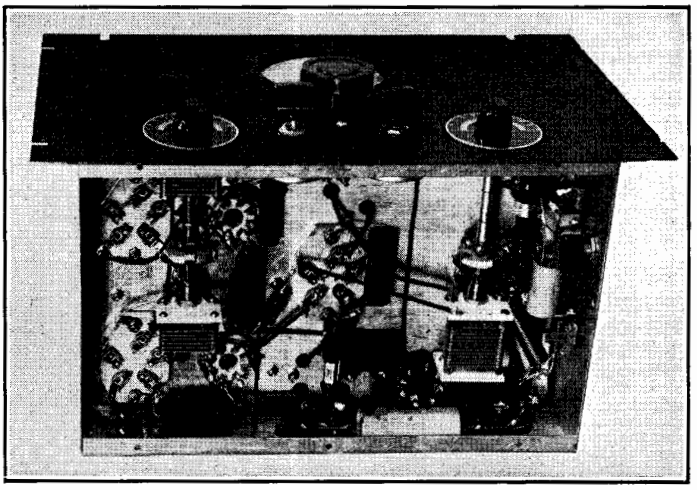

Figure 11.
SHOWING FRONT PANEL AND UNDERSIDE OF CHASSIS.
Most of the "works" are under the chassis. The two ganged r.f. and mixer tuning condensers are visible in this photograph, as is the oscillator bandsetting condenser.

Figure 10.
GENERAL WIRING DIAGRAM OF THE FIVE-TUBE SUPER.

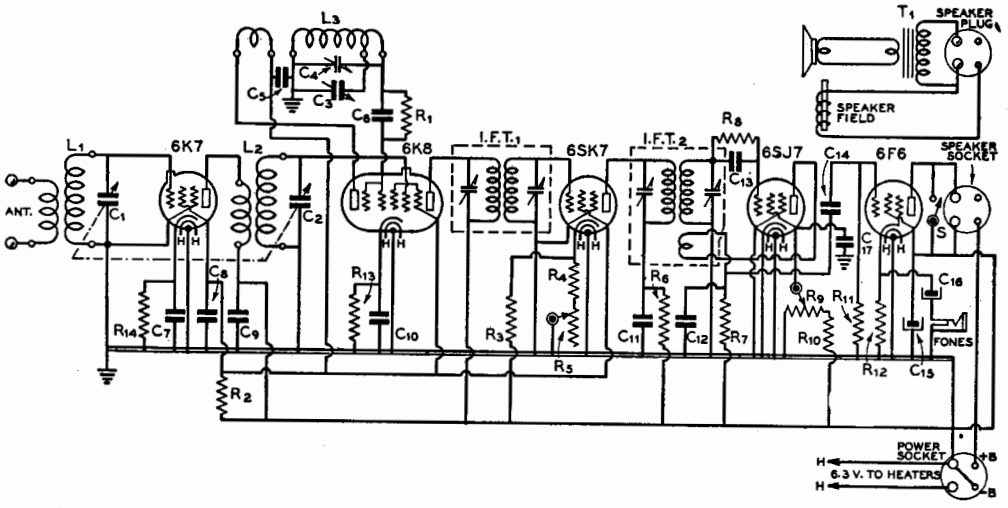

C_1, C_2—50-$\mu\mu$fd. midget variable
C_3—25-$\mu\mu$fd. midget variable
C_4—140-$\mu\mu$fd. midget variable
C_5—0.1-μfd. 400-volt tubular
C_6—.0001-μfd. mica
C_7—.01-μfd. 400-volt tubular
C_8, C_9, C_{10}, C_{11}—0.1-μfd. 400-volt tubular
C_{12}—.0005-μfd. mica
C_{13}—.0001-μfd. mica
C_{14}—.01-μfd. 400-volt tubular
C_{15}—8-μfd. 450-volt electrolytic
C_{16}—10-μfd. 25-volt electrolytic
C_{17}—0.1-μfd. 400-volt tubular
Note: Omitted from the diagram was a condenser from the 6SK7 i.f. stage cathode to ground. This condenser should be a .01-μfd. 400-volt unit.
R_1—75,000 ohms, 1/2 watt
R_2—25,000 ohms, 2 watts
R_3—60,000 ohms, 1 watt
R_4—300 ohms from stop on R_5
R_5—10,000-ohm potentiometer
R_6—2000 ohms, 1/2 watt
R_7—250,000 ohms, 1/2 watt
R_8—1 megohm, 1/2 watt
R_9—10,000-ohm potentiometer
R_{10}—100,000 ohms, 1 watt
R_{11}—250,000 ohms, 1/2 watt
R_{12}—600 ohms, 10 watts
R_{13}, R_{14}—300 ohms, 1/2 watt
IFT_1—1500-kc. input i.f. transformer
IFT_2—1500-kc. input i.f. transformer (see text for alterations)
S—S.p.s.t. toggle switch
L_1, L_2, L_3—See coil table
T_1—Pentode output transformer (on speaker chassis)

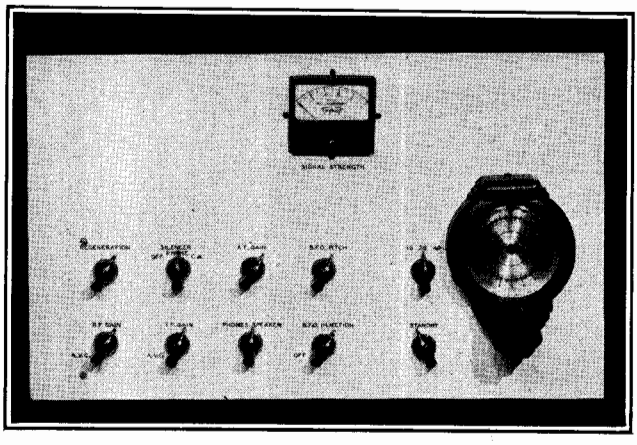

Figure 12.
FRONT PANEL VIEW OF THE ADVANCED SUPERHETERODYNE.
Maximum operating flexibility is provided by having all controls on the panel. In the top row the controls are, from left to right: regeneration, noise limiter, a.f. gain, b.f.o. pitch, and bandswitch; bottom row: r.f. gain, i.f. gain, phones-speaker switch, b.f.o. injection, and standby switch.

The oscillator bandspread tap location given in the coil table will give nearly full-dial coverage of each band. Individual constructors who may have different ideas as to the proper amount of bandspread to use may move the taps along the coils to obtain any desired amount. The 20- or 75-meter phone bands may be spread across the whole dial, for instance, by moving the taps on the coils for these bands nearer the grounded end. Conversely, any one of the bands may be packed into a few dial divisions by moving the coil tap on that band to the grid end of the coil.

Initial Operation. After the receiver has been connected to a power supply delivering from 250 to 300 volts and a speaker having a field resistance of 1500 to 2500 ohms, the i.f. stage and second detector input circuit should be aligned. This is best accomplished with the aid of a signal generator operating in the 1500-to-1600 kc. range coupled loosely to the grid of the mixer. The detector should go into oscillation very smoothly when the regeneration control, R_0, is advanced. If oscillation does not take place it is probable that the tickler is improperly phased, and the tickler connections should be reversed.

After the i.f. amplifier has been aligned, a set of coils should be plugged in and the oscillator bandsetting condenser set to the proper capacity for the coils in use. With a 0-100 scale, with zero at the low capacity end, this setting will be as follows: 10 meters, 35; 20 meters, 80; 40 meters, 60; 80 meters, 60. Next, the r.f. and mixer tuning control should be brought into resonance and, after the oscillator bandsetting control has been adjusted to center the band on the dial, the receiver is ready for use.

ADVANCED BANDSWITCHING PHONE AND C. W. RECEIVER

Quite often receivers are designated as either "phone" or "c.w." sets. This is a desirable designation because the receivers in question have been designed for peak performance in one type of operation and the other use becomes of secondary importance in their circuit arrangement. However, it is quite possible to design a receiver for peak performance for both phone and c.w. Such a receiver is pictured in figures 12–15. This receiver should appeal to the advanced constructor who has had previous experience in receiver construction.

After adequate sensitivity has been provided by a well-designed "front end," two widely differing characteristics in i.f. selectivity must be included to give a universal phone-c.w. receiver. These are: (1) a square-topped selectivity with narrow "skirts" for phone reception and (2) sharply peaked selectivity for single-signal c.w. reception. These two characteristics are provided in this receiver along with such other features as bandswitching, noise limiter, optional a.v.c. or manual gain control on either the i.f. or r.f. stages, b.f.o. injection control, and double conversion for the elimination of images.

Bandswitching. Bandswitching is seldom employed in home-constructed receivers because well-designed coil and switch assemblies are rather costly. By limiting the switching to three bands, however, the cost of the coil and switch assembly may be made little more than that of a set of plug-in coils. Three 3-pole, 3-position isolantite selector switches are used. As may be seen from the circuit diagram, each of these switches per-

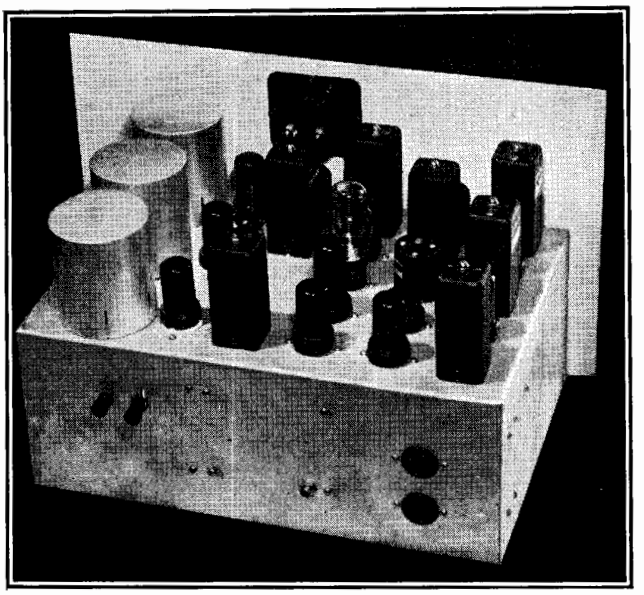

Figure 13.
SHOWING THE CHASSIS LAYOUT OF THE ADVANCED SUPER.
From the rear, the location of the various components above the chassis is clearly visible. The three large shield cans at the left edge of the chassis cover the plug-in coils which are used for the 40- and 80-meter bands.

forms three switching operations for each band for each stage in the "front end." The 10- and 20-meter band coils are air-supported and mounted under the 6-inch-deep chassis close to their respective switch sections. For the third band, which may be either 40 or 80 meters, a set of 5-prong sockets under the shield cans at the right edge of the chassis is switched into the circuit. Thus three bands are made available at the flip of a switch and a fourth band can be had through the use of plug-in coils.

Circuit Arrangement. To eliminate images on the higher-frequency bands and at the same time allow a high degree of selectivity, the i.f. channel employs double conversion. That is, signals are first converted to a relatively high frequency (1500 kc.) and amplified and then again converted, this time to a relatively low frequency (175 kc.) and further amplified. High selectivity is made available, when desired, through the use of optional regeneration in the 175-kc. stage. The square-topped, bandpass characteristic so necessary for phone reception is effected by negative-mutual coupling coils in the 1500-kc. i.f. amplifier.

Tube Lineup. An 1853 tube is used in the r.f. amplifier stage. This stage, as well as all the others in the receiver except the 6J5 first audio stage, receives fixed bias from the bias network, R_{34}, R_{35}. The r.f. gain potentiometer, R_{11}, varies the amount of this fixed bias from 3 to 20 volts. When the r.f. gain control is turned completely "off," the switch S_2 is operated and the 1853 grid return is connected to the a.v.c. line. The cathode of detector-a.v.c. diode is returned to the —3 volt line so that the bias on either the manual or the a.v.c. positions never falls below 3 volts. The gain control circuit on the i.f. stages is a copy of that on the r.f. stage, with either a.v.c. or manual gain being applied to the grid returns of the first mixer, 1500-k.c. i.f. amplifier and second mixer. The 175-kc. i.f. amplifier stage receives fixed bias directly from the –3 volt line, as either manual or automatic adjustment of gain in this stage would result in difficulty in attempting to set the regeneration control.

The 6SA7 first mixer stage is entirely conventional, with injection from the grid side of the oscillator tank circuit through a 50-$\mu\mu$fd. condenser, C_{14}. A 6J5 is used in the oscillator in a grounded-plate Hartley circuit. 150 volts of regulated voltage is applied to this stage from the VR-150-30 regulator tube.

Negative-Mutual Coils. The negative-mutual coupling coils in the 1500 kc. i.f. stage must be connected as shown in the diagram. These units have six turns on each winding, the coils being interwound on a ½-inch form. No. 22 d.c.c. wire is used. Following the 6SK7 1500-k.c. stage is the 6SA7 second mixer. Some changes are necessary in the oscillator coil specified in the parts list and Buyer's Guide to make it suitable for use with the 6SA7. The coil must be

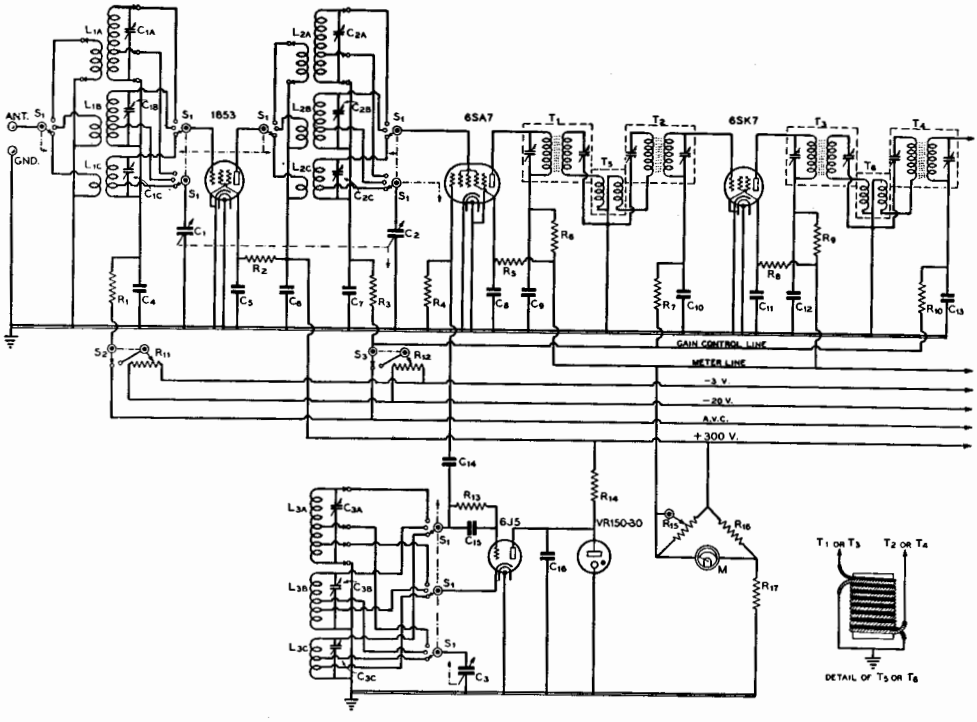

Figure 14.
SCHEMATIC DIAGRAM OF THE ADVANCED SUPERHETERODYNE.

C_1, C_2, C_3—35-$\mu\mu$fd. midget variable
C_4, C_5, C_6, C_7—0.01-μfd. midget mica
C_8, C_9—0.1-μfd. 400-volt tubular
C_{10}—.05-μfd. 400-volt tubular
C_{11}, C_{12}—0.1-μfd. 400-volt tubular
C_{13}—.05-μfd. 400-volt tubular
C_{14}—.00005-μfd. mica
C_{15}—.0001-μfd. mica
C_{16}—0.1-μfd. 400-volt tubular
C_{17}—.0001-μfd. mica
C_{18}, C_{19}, C_{20}, C_{21}—0.1-μfd. 400-volt tubular
C_{22}—.0001-μfd. mica
C_{23}, C_{24}—0.1-μfd. 400-volt tubular
C_{25}—.01-μfd. 400-volt tubular
C_{26}—10-μfd. 25-volt electrolytic
C_{27}, C_{28}—.01-μfd. 400-volt tubular
C_{29}, C_{30}—0.1-μfd. 400-volt tubular
C_{31}, C_{32}—25-μfd. 25-volt electrolytic
C_{33}—.0005-μfd. mica
C_{34}—15-$\mu\mu$fd. midget variable
C_{35}—0.1-μfd. 400-volt tubular
C_{36}—80-225-$\mu\mu$fd. mica trimmer
C_{37}, C_{38}—0.1 μfd. 400-volt tubular
R_1—100,000 ohms, 1/2 watt
R_2—40,000 ohms, 1/2 watt
R_3—100,000 ohms, 1/2 watt
R_4—100,000 ohms, 1/2 watt
R_5—50,000 ohms, 1/2 watt
R_6—2000 ohms, 1/2 watt
R_7, R_8—100,000 ohms, 1/2 watt

removed from the shield can and the leads from the original tickler winding disconnected from the terminals on the mounting strip. Next, 20 turns of small silk or cotton-covered wire should be wound around the dowel coil mount as close to the bottom of the original winding as possible. If this coil is wound in the same direction as the grid winding the proper method of connection will be as indicated on the diagram. The direction of the grid winding may be observed by noting the direction in which the grid lead enters the insulating compound.

After these changes have been made the trimmer condenser C_{36} should be mounted inside the shield can with its adjusting screw protruding through a hole in the top, and the grid leak and condenser assembly, R_{18}, C_{17}, mounted within the shield. It is a rather tight squeeze to get all of these components within the shield but it is quite necessary that they be placed there as any harmonics from this oscillator section reaching the r.f. section of the receiver might cause unwanted "phantom" carriers to appear. With the parts located as described, however, there is no trouble of this type. Shielded grid and cathode leads must be run from the coil terminals to the 6SA7 socket.

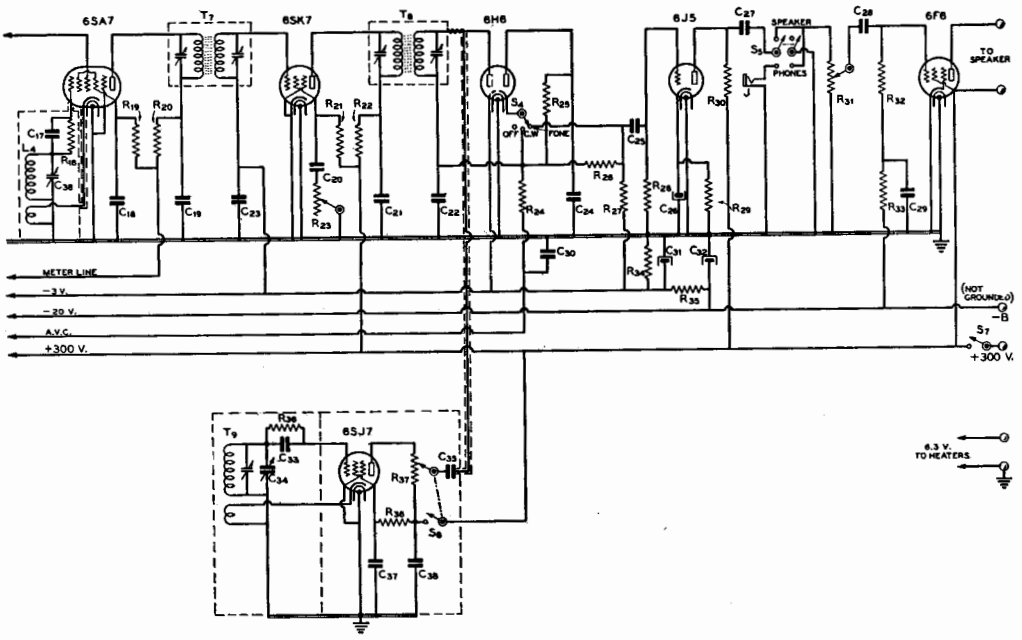

R_9—2000 ohms, ½ watt
R_{10}—100,000 ohms, ½ watt
R_{11}, R_{13}—5000-ohm wire-wound potentiometer
R_{13}—100,000 ohms, ½ watt
R_{14}—2000 ohms, 10 watts
R_{15}—1000-ohm wire-wound potentiometer
R_{16}—2000 ohms, ½ watt
R_{17}—40,000 ohms, 2 watts
R_{18}, R_{19}—50,000 ohms, ½ watt
R_{20}—2000 ohms, ½ watt
R_{21}—100,000 ohms, ½ watt
R_{22}—2000 ohms, ½ watt
R_{23}—5000-ohm carbon potentiometer
R_{24}—250,000 ohms, ½ watt
R_{25}—1 megohm, ½ watt
R_{26}—250,000 ohms, ½ watt
R_{27}, R_{28}—1 megohm, ½ watt
R_{29}—2500 ohms, ½ watt
R_{30}—100,000 ohms, ½ watt
R_{31}—500,000-ohm potentiometer
R_{32}—250,000 ohms, ½ watt
R_{33}—50,000 ohms, ½ watt
R_{34}—15 ohms, 10 watts
R_{35}—150 ohms, 10 watts
R_{36}—100,000 ohms, ½ watt
R_{37}—10,000-ohm potentiometer
R_{38}—250,000 ohms, ½ watt
T_1—1500-kc. input i.f. transformer
T_2, T_3, T_4—1500-kc. interstage i.f. transformer
T_5, T_6—Negative-mutual coupling coils (see text)
T_7—175-kc. input i.f. transformer
T_8—175-kc. diode output i.f. transformer
T_9—175-kc. b.f.o. transformer
L_1, L_2, etc.—See coil table
L_4—B.c. band 465-kc. oscillator coil (see text)
S_1—Three-section 3-pole, 3-position isolantite selector switch
S_2, S_3—Single-pole double-throw switch (on gain control)
S_4—Single-pole three-position noise limiter switch
S_5—D.p.d.t. switch
S_6—S.p.s.t. switch (on injection control, R_{37})
S_7—S.p.s.t. switch
L_{1A}, C_{1A}, L_{2A}, C_{2A}, etc.—See coil table

175-Kc. Channel. The 175-k.c. i.f. channel is conventional except for the method of obtaining regeneration for single-signal reception of c.w. signals. The regeneration control, R_{23}, is placed between the ground side of the 6SK7 screen by-pass and ground. In some cases it may be necessary to place an additional capacity between the grid and plate of this stage to permit full regeneration to be obtained. The additional capacity can well consist of a short length of push-back wire connected to the grid terminal on the socket and run over near the plate terminal.

A 6H6 is used as the detector-noise limiter. One of the diodes serves as a diode detector and a.v.c. rectifier, while the other diode performs the function of noise limiting. A three-position switch in the noise diode cathode allows either off, phone, or c.w. settings. Returning the cathode of the detector-a.v.c. diode to the -3 volt line insures a minimum 3-volt bias at all times on the stages operating from the a.v.c. line. The audio system following the detector is entirely conventional and needs no detailed comment.

Mechanical Layout

Looking at the receiver from the front, the components above the chassis are as follows: Along the right edge, from front

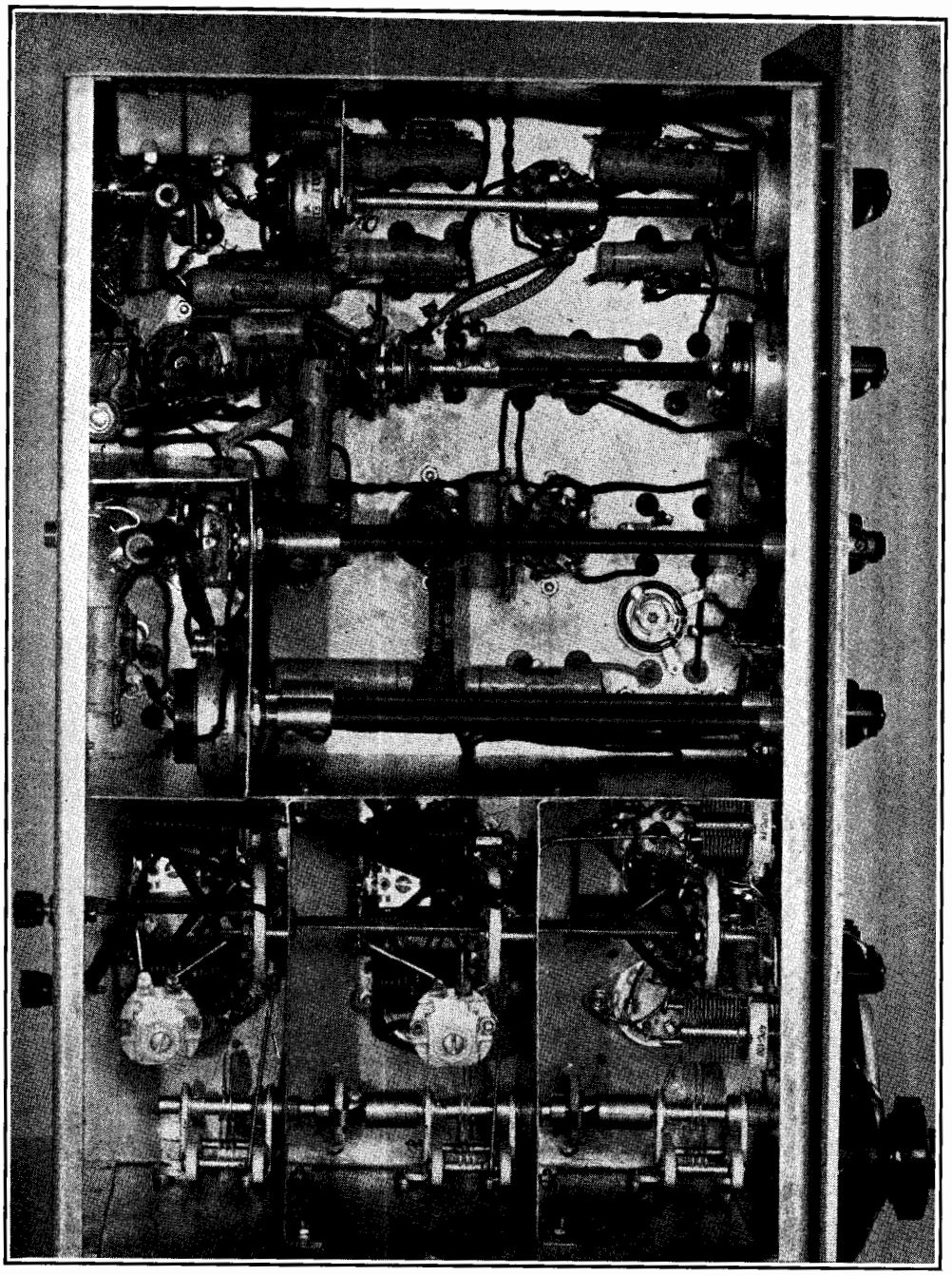

Figure 15.

UNDERNEATH THE CHASSIS OF THE ADVANCED SUPERHETERODYNE.

Note the "air-wound" 10- and 20-meter coils in the r.f., mixer and oscillator stages. The shield partition at the rear center of the chassis mounts the b.f.o. and audio controls.

to back, are the r.f., mixer, and oscillator stages. The 1500-k.c. i.f. channel progresses along the front of the chassis toward the left edge, where the 1500-k.c. to 175-k.c. mixer stage is located, with the 175-k.c. stage directly behind it along the left edge of the chassis. The audio section and the beat oscillator and voltage regulator are located in the rear-center portion of the chassis. The actual arrangement of the audio section is of little importance as long as the various controls associated with these circuits are reasonably close to the tubes with which they operate.

Underneath the chassis every effort should be made to keep all the grid and plate leads as short and direct as possible. This is particularly important in a receiver such as this, where single-ended tubes are used throughout. Large holes should not be cut under the i.f. transformers; small holes just large enough to allow the passage of the leads should be used.

The Bandswitch. The bandswitch is made up from parts supplied by the manufacturer in kit form. The first switch section, which includes the index assembly, is mounted directly on the front drop of the chassis. The two rear sections are supported from the two interstage shield partitions. In assembling the front end, the oscillator should be wired and tested first, and then the oscillator-mixer partition added. Next, the mixer should be wired and

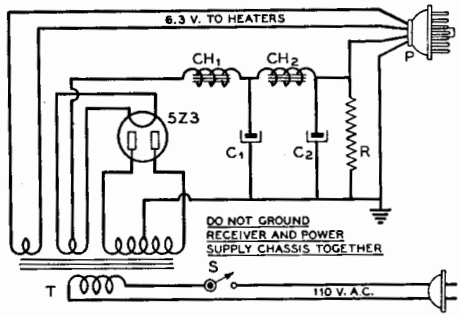

Figure 16.
POWER SUPPLY FOR RECEIVER OF FIGURE 14.

T—750 v., c.t., 150 ma.; 5 v., 3 a.; 6.3 v., 5 a.
CH_1, CH_2—30 hy., 100 ma.
C_1, C_2—16-μfd. 450-volt electrolytic
R—50,000 ohms, 20 watts
S_1—S.p.s.t. switch

tested and the remaining shield partition installed, the assembly progressing from front to rear until this whole section of the receiver is completed. It is necessary to drill a hole in the rear drop of the chassis to allow the flat shaft for revolving the switch sections to be installed. This hole can well be used to mount the antenna binding post.

The chassis measures 6x10x15 inches, and the panel 11x18 inches.

Alignment. After all wiring has been completed and checked, the i.f. channels

	R.F.			DET.			OSC.			
	ANTENNA	GRID	B. S. TAP	PLATE	GRID	B. S. TAP	GRID	B. S. TAP	CATHODE TAP	
80	5 t. close wound	29½ t. spaced to 1⅝". Padder 25-100 mica	to grid end	10 t. close wound	29½ t. spaced to 1⅝". Padder 25-100 mica	to grid end	20½ t. spaced to 1½". Padder 100 air	16 t.	3 t.	all no. 22 d.c.c. all wound on 1½" forms
40	5 t. no. 22 d.c.c. close wound	17½ t. no. 18 enam. spaced to 1½". Padder 25-100 mica	8 t.	10 t. no. 22 d.c.c. close wound	17½ t. no. 18 enam. spaced to 1½". Padder 25-100 mica	8 t.	13½ t. no. 18 enam. spaced to 1½". Padder 100 air	7 t.	2 t.	all no. 22 d.c.c. all wound on 1½" forms
20	6 t. no. 20 hookup wire inside grid coil at ground end	13 t. no. 16 enam. ¾" dia. spaced to 1¼". Padder 25-100 mica	5½ t.	6 t. no. 20 hookup wire inside grid coil at ground end	13 t. no. 16 enam. ¾" dia. spaced to 1¼". Padder 25-100 mica	5½ t.	13½ t. no. 16 enam. ½" dia. spaced to 1¼". Padder 100 air	6 t.	2½ t.	
10	5 t. no. 20 hookup wire inside grid coil at ground end	13 t. no. 16 enam. ½" dia. spaced to 1¼". Padder 3-30 mica	5 t.	5 t. no. 20 hookup wire inside grid coil at ground end	13 t. no. 16 enam. ½" dia. spaced to 1¼". Padder 3-30 mica	5 t.	6 t. no. 16 enam. ½" dia. spaced to ⅝". Padder 75 air	4 t.	1½ t.	

All taps refer to number of turns up from ground end of coil. Note that grid coil is same for both r. f. and detector on all bands. 80 and 40 m. coils are plug in.

COIL TABLE FOR DELUXE RECEIVER

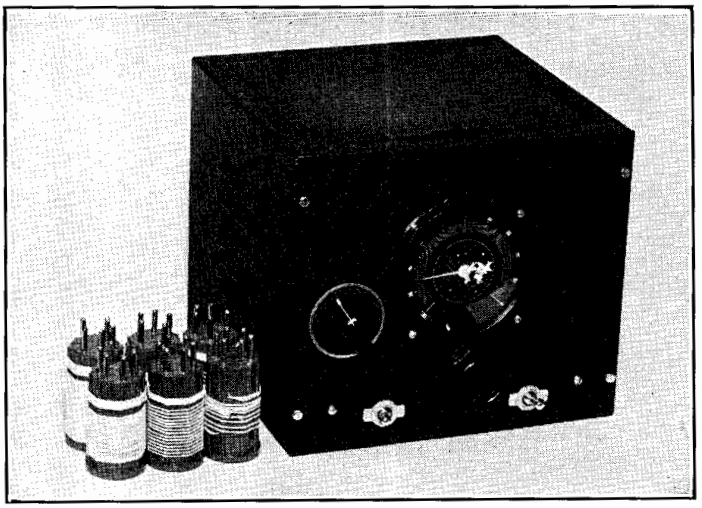

Figure 17.
FRONT VIEW OF THE CONVERTER INSTALLED IN ITS METAL CABINET.
The coils for the 80-, 40- and 20-meter bands are shown to the left of the unit. The front panel controls are: oscillator bandset, bandspread, and detector tuning; the left-hand switch is for filament voltage and the one to the right controls the b.f.o.

should be aligned. A calibrated signal generator is almost a necessity during the alignment process. First the 175-kc. channel should be aligned. If the receiver has been wired correctly this should be quite easy, remembering that the regeneration control should be turned completely "off," that is, with the resistance all out of the circuit. When the 175-kc. stage has been aligned properly, the signal generator should be set at 1500 kc. and shifted to the grid of the second mixer. With the signal generator output connected into this circuit, adjust the 6SA7 oscillator-section trimmer (C_{36}) until the signal from the generator is heard at the output of the receiver. The second mixer is now converting from 1500 to 175 kc. and the 1500-k.c. channel may be aligned in the usual manner.

Power Supply. Two octal sockets are provided at the rear of the chassis for speaker and power supply connections. The additional contacts on these sockets may be used to bring leads for transmitter remote control and other remote switching circuits into the receiver. The power supply is strictly conventional; a diagram is shown in figure 16.

BATTERY OPERATION

When a.c. power is not available, the simple regenerative receiver described at the beginning of this chapter may be run economically entirely from batteries. If dry batteries are to be used for filament supply, it is recommended that a 6S7 be substituted for the 6J7 and that a 6L5-G be substituted for the 6C5. These tubes are almost identical to the 6J7 and 6C5 except that they draw only half the heater current, and their slightly greater cost will be repaid many times if dry batteries are used to supply the heaters.

As high transconductance heater type tubes may be run satisfactorily at considerably reduced heater voltage if the tube is not drawing heavy plate current, only 4.5 volts are required for full performance. Three standard no. 6 dry cells in series will give over 150 hours life when the low drain tubes are used.

The more elaborate receivers in this chapter can be run from a storage battery and heavy duty B batteries, 0.15 amp. heater tubes being substituted to advantage when the tubes specified in the diagram have a low-drain counterpart. The audio output tube can be over biased to keep the plate current down to the lowest value that will still permit sufficient output without objectionable distortion. Generally speaking, receivers designed for 250 volt operation will work practically as well on four 45 volt B batteries.

Vibrator power supplies can be used for plate voltage, but as a general rule will require elaborate filtering to avoid "hash" in the receiver on the higher frequencies.

BATTERY CONVERTER

When a highly sensitive and selective receiver that can be run entirely from dry batteries is desired, the recommended course is to purchase (if not already owned) one

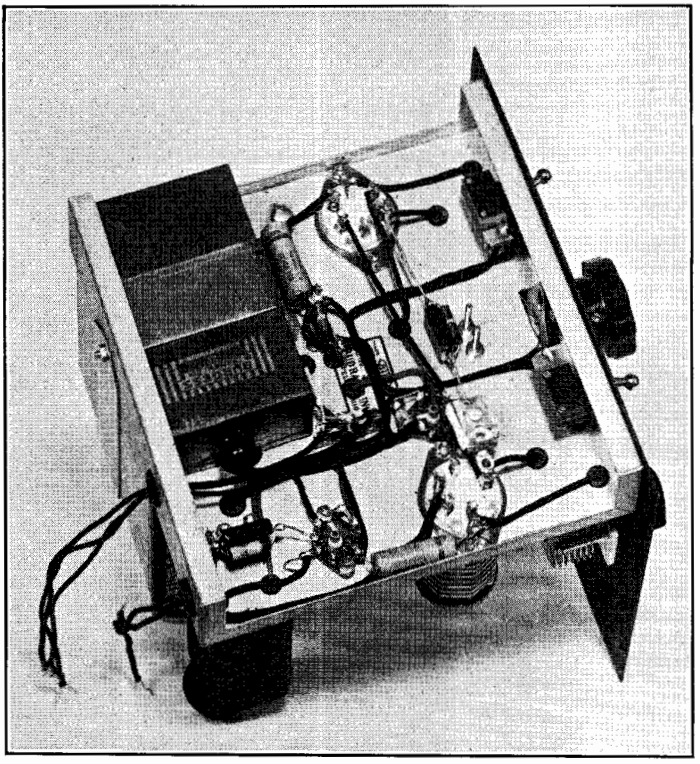

Figure 18.
UNDER-CHASSIS VIEW.
Note the strap which holds the filament battery in place, the miniature sockets for the miniature tubes, and the screwdriver-set neutralizing condenser between the detector coil socket and the oscillator-grid terminal on the mixer tube.

of the new portable, battery powered broadcast receivers and use it in conjunction with the following battery powered 10-80 meter converter. For home use, the converter can be used with any battery operated broadcast receiver having good sensitivity and selectivity.

The unit consists of a 1R5 "button" type pentagrid converter and a 1T4 beat frequency oscillator of the same miniature type. Use of these tubes permits efficient operation at only 45 volts plate supply.

For phone work, only the 1R5 is used, and the 1T4 filament is switched off to conserve the filament power. No coupling other than stray circuit capacity is used to couple the b.f.o., the amount of coupling present being just about right for giving a good beat on loud signals without masking weak signals.

Mechanical Construction. The complete converter is built into a small 8" by 8" by 7" cabinet of standard manufacture. The chassis is also a standard unit and is designed to be used with this particular cabinet.

Three controls and the two filament switches are mounted upon the front panel. The left control is the knob on the bandset control which consists of a 100-$\mu\mu$fd. variable connected across the h.f.o. coil. The center condenser is a 35-$\mu\mu$fd. midget and is controlled by an inexpensive 3-inch "airplane" dial. The right-hand control is the detector tuning condenser and consists of a 50-$\mu\mu$fd. midget connected directly across the grid coil.

A glance at the under-chassis and the top-chassis view will show that each battery is mounted by means of a piece of metal strap about 1¼ inches wide. The filament battery is of a convenient size to fit snugly below the chassis, and the plate 45-volt B battery, when turned on its side, is just about the same height as the i.f. and b.f.o. transformers.

Aside from this there are few points concerning the construction of the unit that will not be immediately apparent from the photographs. However, one thing that should be mentioned is that care must be taken in inserting the miniature tubes into their sockets for the first time. The element-connection prongs for the tubes are merely extended pieces of molybdenum wire which are sealed into the glass base of the tube. If too much strain or tension is placed upon these wires

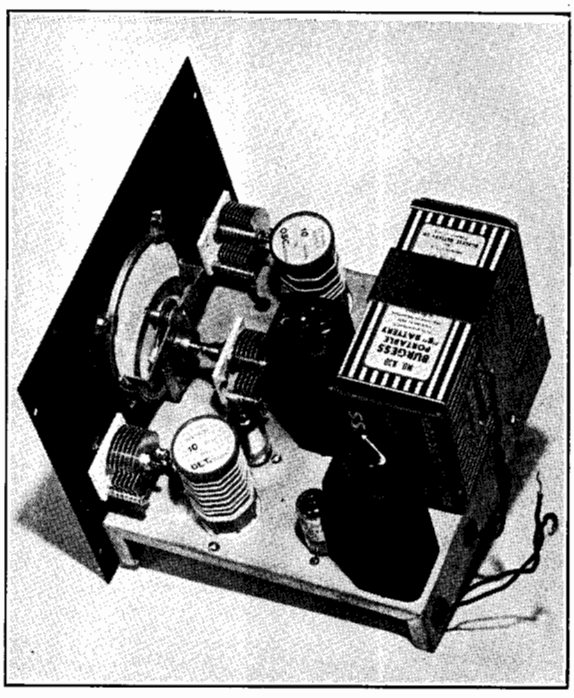

Figure 19.
TOP VIEW OF THE CHASSIS REMOVED FROM THE CABINET.
The miniature mixer tube can be seen between the detector coil and the bandspread condenser, and the b.f.o. tube is placed just in front of the b.f.o. coil. The five leads coming out of the rear of the chassis are soldered to a terminal strip on the rear of the box which houses the unit.

there is a possibility that the glass envelope or the glass base of the tube may be fractured.

The plate of the 1R5 mixer feeds into a 1600-kc. double-tuned i.f. transformer which has been revamped to give low-impedance output in addition to the output voltage from the other high-impedance winding on the transformer. The low-impedance winding consists simply of about 10 turns wound on the end of the dowel just below the winding which feeds the plate of the 1R5. One side of both the low-impedance winding and the high-impedance winding is grounded.

Normally the low-impedance winding will be used to couple the converter to the receiver, the two wires from the 10 turn winding simply being connected to the antenna and ground posts on the receiver. If the receiver happens to be of the small portable type having a loop antenna and no provision for connecting an external antenna, the grid clip should be removed from the first tube in the receiver and a wire run from the grid of the tube to the no. 2 output terminal of the converter. This lead should be kept as short as possible. A wire also should be run from the ground terminal of the converter to the chassis of the receiver, so that there will be a bias return for the first tube in the receiver.

An alternative method that can be used when the receiver has no provision for an external antenna is to wind 2 or three turns of wire into approximately the same shape as the loop antenna and fasten these turns to the cabinet so as to be in close inductive relation to the loop. These turns are then

Coil Table

All coils are wound on 1¼-inch diameter forms with no. 22 d.c.c. wire.

80-Meter Oscillator—22 turns 1¼ inches long, tap 15 t. from ground, tickler 6 turns.

80-Meter Detector—45 turns closewound, antenna coil 7 turns closewound.

40-Meter Oscillator—15 turns 1¼ inches long, tap 7 t. from ground, tickler 4 turns.

40-Meter Detector—30 turns closewound, antenna coil 6 turns closewound.

20-Meter Oscillator—7 turns 1 inch long, tap 3 turns from ground, tickler 3 turns interwound.

20-Meter Detector—14 turns 1½ inches long, antenna coil 5 turns closewound.

10-Meter Oscillator—3 turns 1¼ inches long, tap 1 turn from ground, tickler 2 turns interwound.

10-Meter Detector—7 turns 1¼ inches long, antenna coil 4 turns.

C_1—50-$\mu\mu$fd. midget variable
C_2—35-$\mu\mu$fd. bandspread variable
C_3—100-$\mu\mu$fd. bandset variable
C_4—.0001-μfd. midget mica
C_5—.01-μfd. 600-volt tubular
C_6—.0001-μfd. midget mica
C_7—.01-μfd. 600-volt tubular
C_8—330 $\mu\mu$fd. isolantite trimmer
R_1—100,000 ohms, 1/2 watt
R_2—100,000 ohms, 1/2 watt
R_3—75,000 ohms, 1/2 watt
L_1, L_2—See coil table
IFT—1500 kc. i.f. trans. with 10 coupling turns added
BFT—1500 kc. beat osc. trans.
S_1—On-off switch
S_2—B.f.o. on-off switch

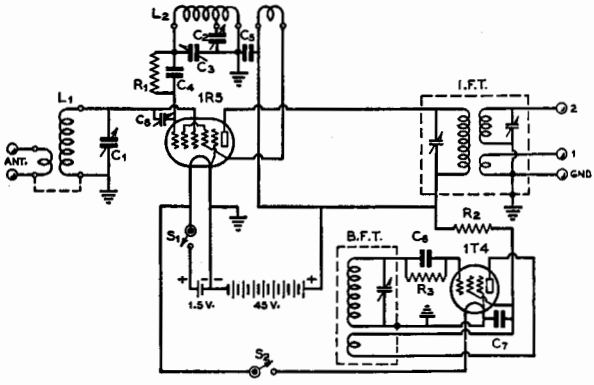

Figure 20.
WIRING DIAGRAM OF THE BATTERY POWERED CONVERTER.

connected to terminals 1 and gnd. the same as for a regular antenna coil.

Tuning Up. Tuning up the converter is a comparatively simple process provided the coil table has been followed exactly and provided a high-gain broadcast receiver is available for the first test. The b.c.l. set is first tuned to 1600 kc. (or a point close to that frequency where no b.c. or police stations are audible) and the gain turned up until background noise can be heard. The 40-meter coils are plugged into the set and the filament switch turned on.

With the bandset condenser on the oscillator at about half scale, tune the primary on the 1600-kc. output i.f. transformer in the converter at the same time that the detector tuning condenser is being rotated back and forth. A point will be found where the hiss (or perhaps a signal) comes in loudest. A retrimming of the i.f. transformer and of the detector tuning will then complete the tuning.

Note that 6-prong forms have been used for the oscillator coils and 5-prong ones for the detector. This has been done simply to insure that the proper coils will be inserted into the proper places.

It will be found best to have the ten-meter coils in the converter when the neutralizing condenser C_8 is being adjusted. Set the bandset condenser to about 60, tune in a signal on the bandspread dial, and peak it up on the detector condenser. Then adjust C_8 back and forth until rotating the detector condenser back and forth gives the least "pulling" of the oscillator. The best setting will be found with the open edges of the neutralizing condenser separated about one-eighth inch. At the proper setting there will be only a very small amount of pulling on the ten-meter coils and a negligible amount on the lower frequency bands.

HIGH GAIN 5-BAND PRESELECTOR

If a superheterodyne has less than two stages of preselection, its performance can be greatly improved by the addition of this high gain preselector. The improvement in image ratio and signal-to-noise ratio will be most noticeable on the higher frequency

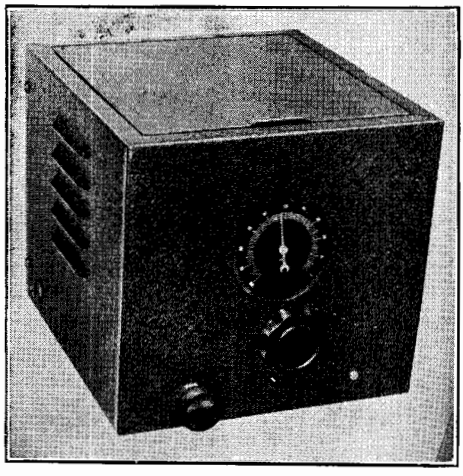

Figure 21.
5-BAND HIGH GAIN PRESELECTOR.
This high gain preselector uses an 1851 tube, tuned output circuit and moderate regeneration. It makes a worthwhile addition to any receiver having less than two r.f. stages.

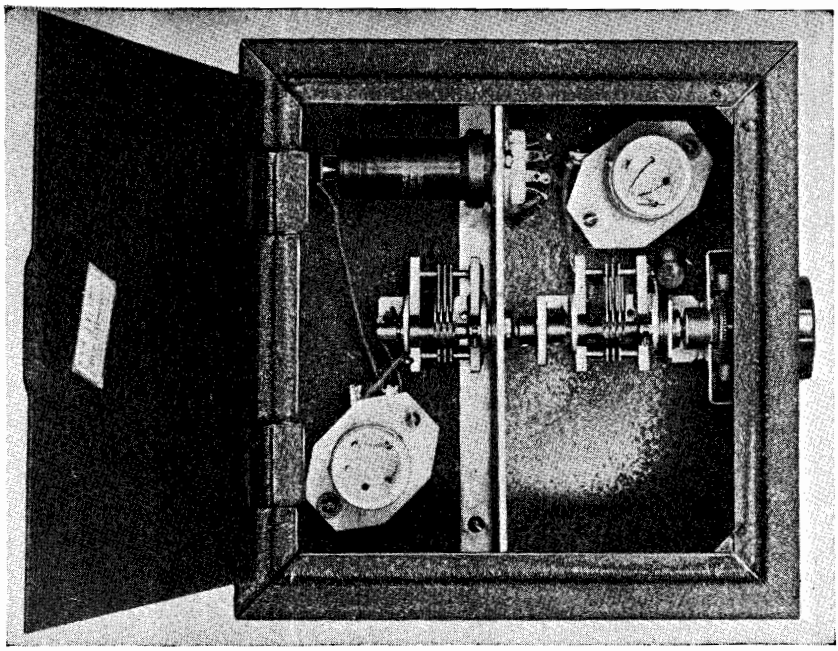

Figure 22.
LOOKING DOWN INTO THE 1851 HIGH GAIN PRESELECTOR.
An aluminum partition shields the input from the output circuit, and serves as a support for the tube and rear tuning condenser.

bands and will be especially noticeable if the receiver itself has no r.f. stage at all.

The preselector uses a type 1851 pentode. This tube has a low noise level and extremely high transconductance. In fact, it is necessary to tap the plate of the tube down from the "hot" end of the tuned plate coil in order to avoid oscillation.

The tuned plate circuit is link-coupled to the input terminals of the receiver to which the preselector is to be attached. The coupling link is of the coaxial type, made of flexible shielded conductor. The use of a tuned output circuit and an efficient coupling system makes this preselector greatly superior in performance to the simpler, more common type of one-stage preselector in which the plate of the preselector tube is capacitively coupled to the antenna post of the receiver.

The preselector is moderately regenerative; in fact, it will tend to oscillate unless the input circuit is rather heavily coupled to an antenna.

The 1851 has a very low input resistance, especially on 10 meters. For this reason the

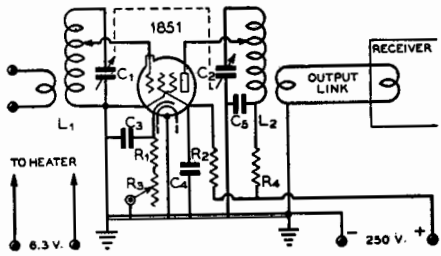

Figure 23.
SCHEMATIC CIRCUIT OF THE 1851 PRESELECTOR.

C_1, C_2—2-gang 50-$\mu\mu$fd. per section midget variable
C_3—0.1-μfd. 400-volt tubular
C_4, C_5—.01-μfd. 400-volt tubular
R_1—200 ohms, 1 watt
R_2—50,000 ohms, 1/2 watt
R_3—10,000-ohm potentiometer gain control
R_4—5000 ohms, 1 watt
Coils—See coil table

1851 PRESELECTOR COIL DATA

COIL BAND	GRID COIL	PLATE COIL
10	8 turns #20 d.c.c. 1⅛" diam. 1" long center tapped Primary— 2 turns	Same as grid coil Secondary— 2 turns
20	15 turns #20 d.c.c. 1⅛" diam. 1" long center tapped Primary— 3 turns	Same as grid coil Secondary— 2 turns
40	24 turns #22 d.c.c. 1½" diam. 1½" long tap at 10 turns Primary— 5 turns	Same as grid coil tap at 12 turns Secondary— 3 turns
80	44 turns #24 d.c.c. 1½" diam. 1½" long tap at 15 turns Primary— 8 turns	Same as grid coil tap at 15 turns Secondary— 3 turns
160	80 turns #26 enam. 1½" diam. closewound tap at approx. 20 turns Primary— 12 turns	Same as grid coil Secondary— 3 turns

grid is tapped down on the input coil, being connected approximately to the center of the coil. This reduces the grid loading to one-quarter without reducing the input voltage, due to the higher Q obtained with the tapped arrangement. Not only are selectivity and image rejection greatly improved, but tracking is greatly simplified by tapping down on the grid coil.

Tapping the grid and plate leads down on their respective coils effectively reduces the minimum shunt capacities, thus allowing a greater tuning range with a given tuning condenser. With the 50-$\mu\mu$fd. tuning condensers illustrated, approximately a 2-1 range in frequency is possible with each set of coils. This gives practically continuous coverage of the short-wave spectrum with the coils listed in the coil table. The coils cover the following ranges: 1.7 to 3.5 Mc., 3 to 6 Mc., 6.5 to 11 Mc., 10 to 19 Mc. and 18 to 33 Mc. Thus, the preselector can be used effectively with communication receivers of the continuous coverage all-wave type.

If oscillation is troublesome even when tight antenna coupling is used, the plate coil can be tapped a little farther down towards the ground (B plus) end.

If desired, a 6J7 or 6K7 can be used in place of the 1851. If one of these tubes is used, both grid and plate should be connected directly to the "hot" ends of their respective coils, instead of to the center. The gain will not be quite as high as with an 1851 and the tuning range will be reduced slightly. The latter can be offset by using 75-$\mu\mu$fd. tuning condensers instead of 50-$\mu\mu$fd. condensers.

Tracking can be checked by rotating the rear tuning condenser separately while listening to a station and watching the R meter.

Construction. The unit is built in a 7"x-7"x7" cabinet and chassis. A 6¼"x5¼" aluminum partition with a ½-in. lip to permit fastening to the chassis as illustrated in figure 36 shields the input from the output circuits. The rear tuning condenser is mounted on this partition and driven from the front condenser by means of an insulated coupling. While the tube is shown mounted horizontally, it could be just as well mounted vertically; the leads would be just about as short.

For maximum gain on the higher frequency range, tuning condensers, sockets and coil forms should have ceramic insulation.

Most receivers will stand a slight additional drain on the plate and filament supplies without overheating. For this reason, the preselector voltages may be robbed from the receiver with which it is to be used. If the receiver power supply already runs quite hot, indicating that it is being overloaded, a separate power supply is advisable for the preselector.

A 6K7 may be substituted for the 1851 with a slight loss in gain. If a 6K7 is used, R_2 should be increased to 100,000 ohms and both grid and plate should connect directly to the tuning condensers rather than to a center tap on the coil.